Port threads:
Port P - BSP G 1/2"
Port A, B - BSP G 1/2"
Port T2, T3 - BSP G 3/4"
Port T1- BSP G 1/2"
Port N - BSP M26x1,5

Nominal flow rate: 70 l/min
Operating pressures:
@ port P - 250 bar
@ port A, B - 300 bar
@ port T - 35 bar

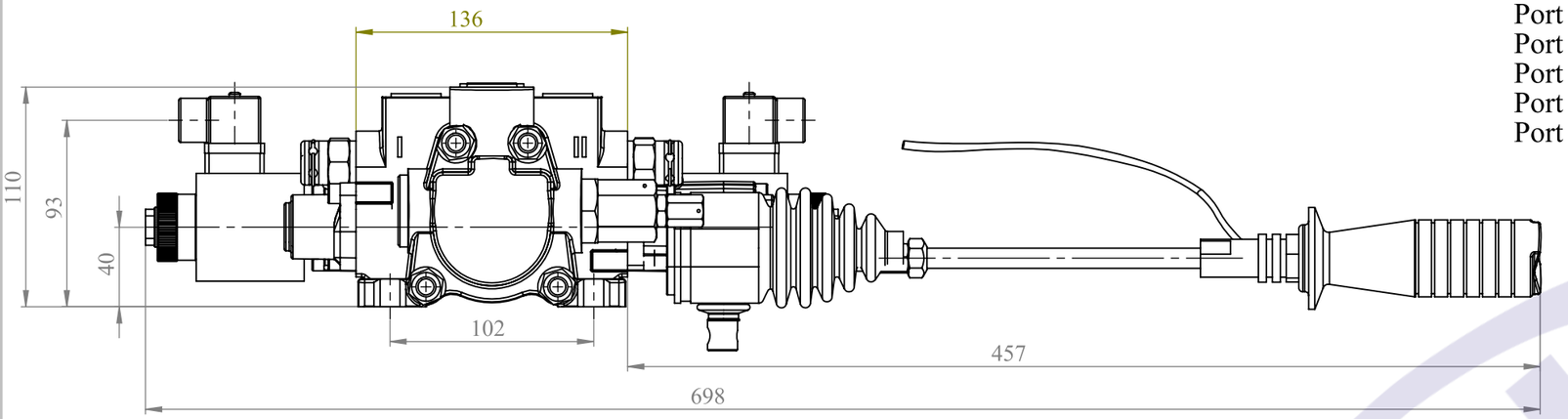

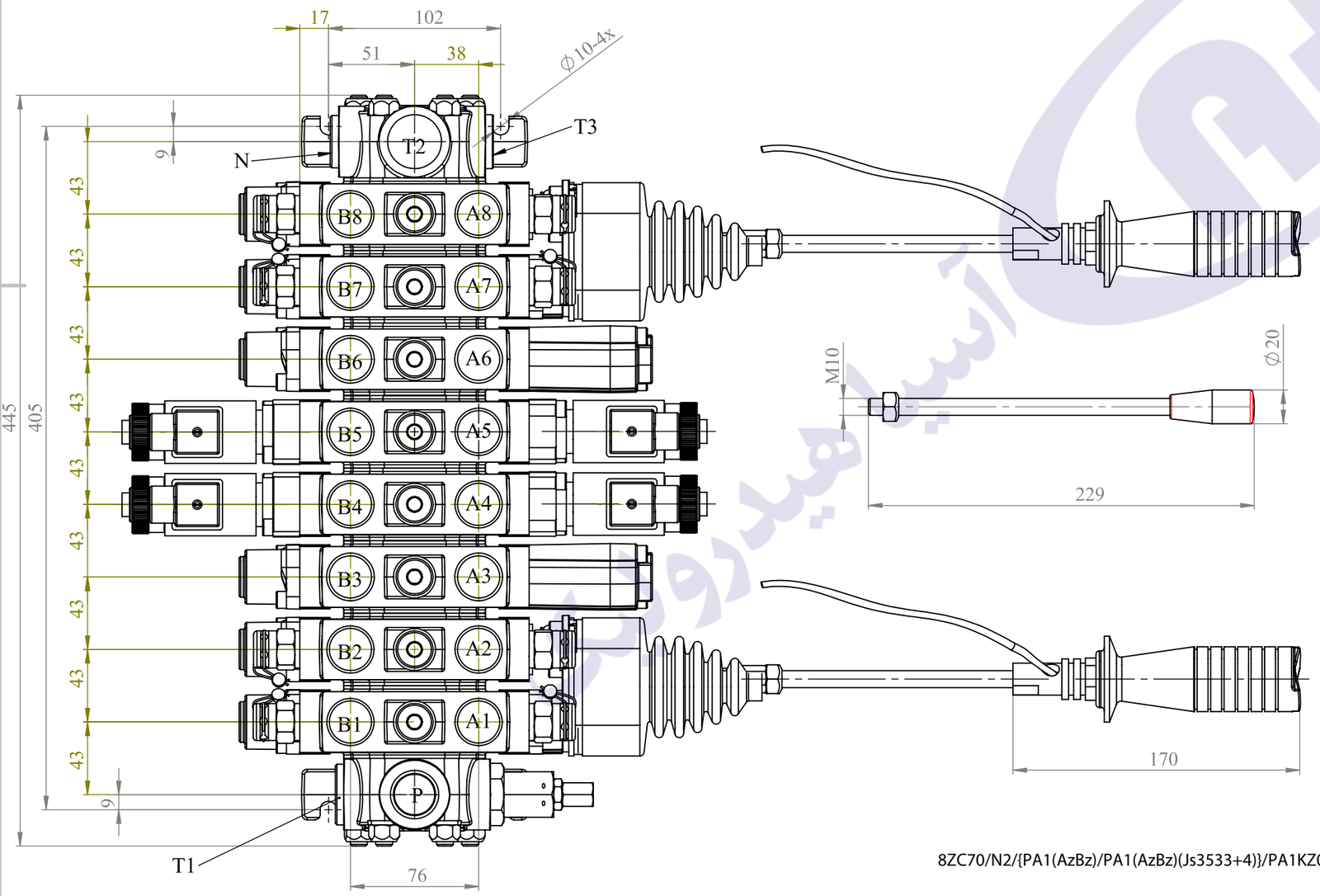

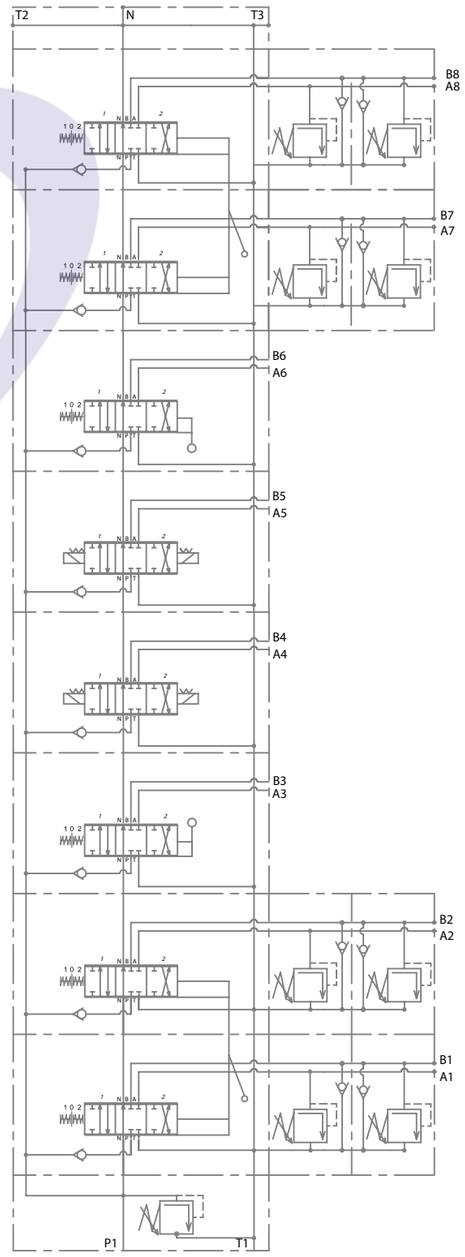

8ZC70/N2/{PA1(AzBz)/PA1(AzBz)(Js3533+4)}/PA1KZ01/PAES3/PAES3/PA1KZ01/{PA1(AzBz)/PA1(AzBz)(Js3533+4)}/T2G12-12VDC

Order code: 4117809

sheet 1/1	description		weight (g)
scale 1:3			32.880
Drawn By	آسیا هیدرولیک	№	
Checked By		561.00.00.00-127	